Loop-powered -- Isolated Transmitter Slim-type (22.5mm wide) 2TD

■ FEATURES

- ●Accuracy: ±0.1% F.S.
- ● Measuring 4~20 mAdc (2 wire type)
- ● Surge test of AC 1000V / min between input 1 / input 2 / output 1 / output 2
- ● High stability, non-flammable case (PC), high safety

■ ORDER INFORMATION : 2TD - Code 1 Code 2

Code 1	Input Channel
1	1 Channel
2	2 Channels

Code 2	Analog Output
1	4~20mA
2	1~5V
O	Option

■ SPECIFICATION

- ♦ Accuracy: ±0.1% F.S.
- ♦ Zero Adjustment: ≦±5% F.S.
- ♦ Span Adjustment: ≦±10% F.S.
- ♦ Output Response Time: <200 msec (0~90%)
- ♦ Output Ripple: ≦0.5% F.S.
- ♦ Isolation: Input 1/ Input 2 / Output 1/ Output 2
- ♦ Voltage Drop: 2.5Vdc at 20 mA
- ♦ Operating Current: 0.3 ~ 22 mAdc
- ♦ Temperature Coefficient: 100ppm / ℃ (0~60℃)
- ♦ Operating Temperature: 0~60℃
- ♦ Operating Humidity: 20~90% RH (non-condensing)
- ♦ Storage Temperature: -10~70℃
- ♦ Storage Humidity: 20~90% RH (non-condensing)
- ♦ Surge Test: 1KVac / 1min
- ♦ Insulation Resistance: >100MΩ with 500Vdc
- ♦ Input Impendence: ≧50KΩ
- ♦ Installation: DIN Rail 35mm (EN50022)

■ DIMENSION

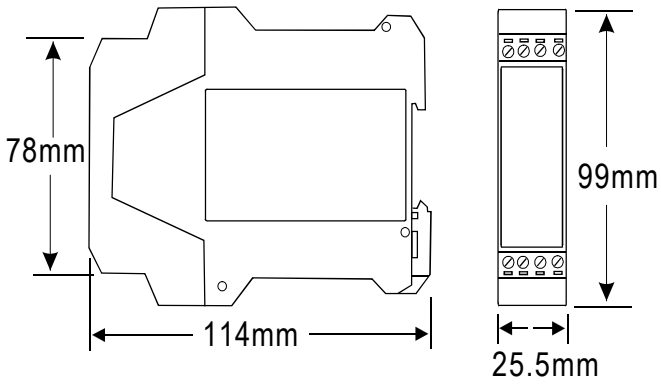

■ VOLTAGE VARIATION FOR INPUT

● Output: 4~20 mAdc

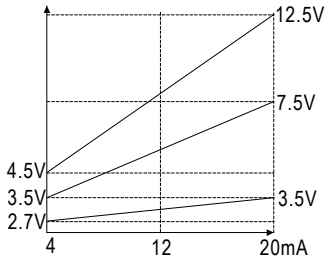

● Output: 1~5 Vdc

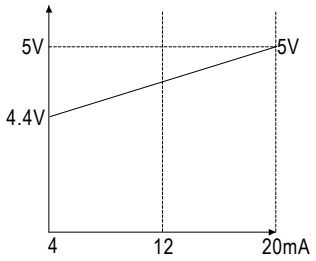
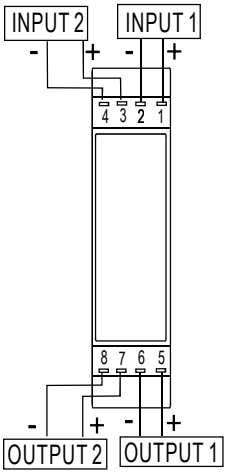
■ WIRING CONNECTION